PRODUCT: 302 15

SPARES LIST

Cabinet – outer components

item no	part no	description	comment
1	638038589	Switch Dispense	
2	638032785	Rocker switch	
3	638032822	Ice Chute	
4a	638032739	Grill - drain tray	
4b	638032725	Drain tray skirt	
4c	638032766	Drain tray kit	inc tray, skirt, grill
4d	638032765	Drain tray assy	inc.tray and grill
not shown	638032818	Wire harness	

Cabinet – inner components

item no	part no	description	comment
1	638032776-002	Electrical box assembly	
2a	638032845	Compressor assembly	includes start components
2b	638032845-001	Overload	compressor overload
2c	638032845-002	Relay	compressor relay
2d	638032845-003	Capacitor	compressor capacitor
3a	638032762-002	Water valve	
3b	638032777	Valve needle	
3c	638032778	1/4 hose barb con	
3d	638007373	Connector	
4	638032714	Air filter	condenser filter
5	638001007	Fan blade	
6	638010016	Fsn motor	
7	638090130-004	Front end assembly	
8	638032815	Water dispense tube	
9	638006070	Tube vinyl	
10	638031108-01	Dispense mechanism	
11	638032770-002	Ice level control	
not shown	638031763-002	Drain recepticle assembly	
not shown	638032843	Water level control	
not shown	638010018	Relay	located in electrical box
not shown	638004791	Switch	located in electrical box
not shown	638032844	Merchandiser transformer	located in electrical box

SPARES LIST **IMD 302 15**

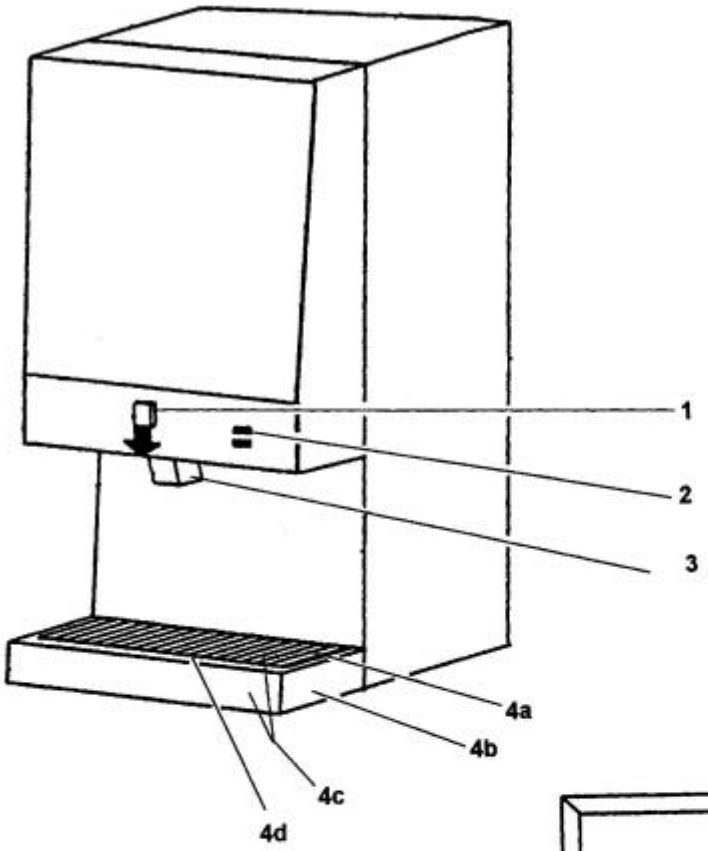

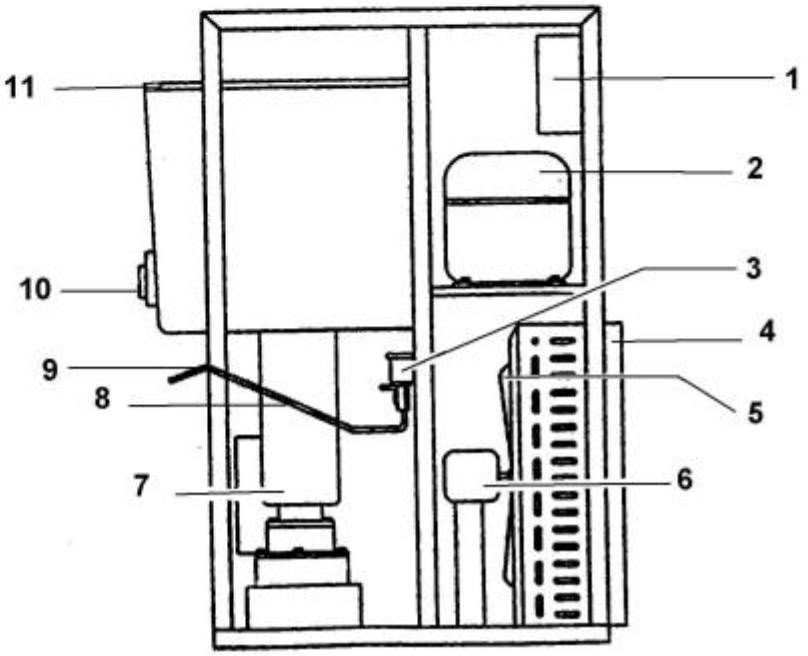

IMI Cornelius
Rawson Spring Way
Riverdale Ind Est
Sheffield
S6 1PG
Tel. +44 (0) 1142 855886 Fax. +44 (0) 1142 321070

IMD 302 15
SPARES LIST **GEAR MOTOR ASSEMBLY**

Item no	Part no	Description	Comment
	638090050-005	Gear motor assembly	
1	638041931	Fan blade	
2	638041954	Motor and adapter	
3	638090003	Seal	lip
4	638041922	Relay	
5	638041923	Needle bearing 0.312	
6	638041907	Shim	
7	638041937	Gear sub assy	
8	638041908	Shim	
9	638041905	Gasket	
10	638041909	Spring washer	
11	638041946	Bearing	
12	90002	Low speed gear ssy	low speed gear assy
13	638041938	Shim	
14	638041931	intermediate speed gear sub assy	
15	638041939	Shim	
16	638041936	Needle bearing 0.375	
17	638041926	Seal	
18	638041911	Overload protector	
not shown	638041902	Adaptor assy	
not shown	638041903	Bearing	
not shown	638041912	Rotor motor	
not shown	638041913-001	Stator	
not shown	638041927	Bearing	

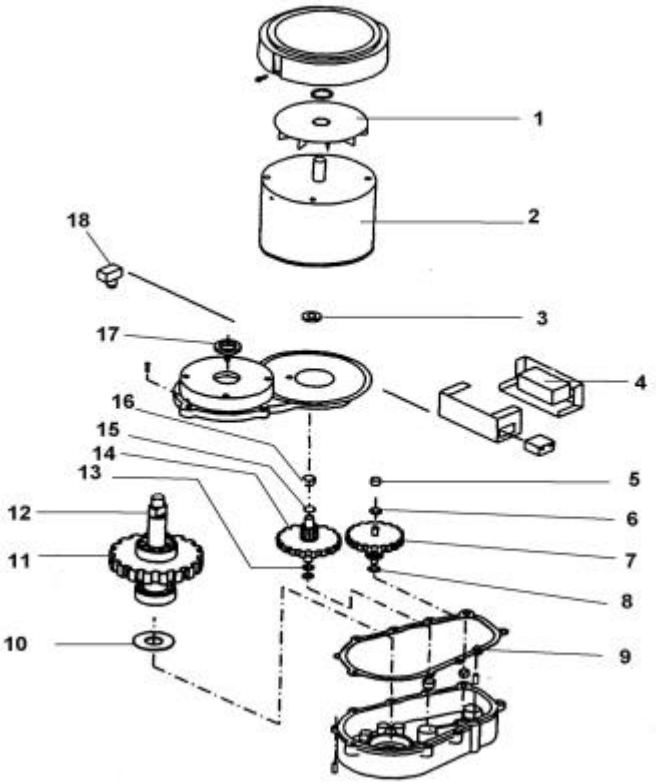

IMD 302 15

SPARES LIST **ICE CONTROL top view**

item no	part no	description	comment
1	638032760-002	Gear motor-dispense	
2	638032748	Cable - gear motor	
3	638032771	Cable - ice level control	
4	638003924	Switch	

ICE CONTROL top view

item no	part no	description	comment
5	638032750	Ice level plate	
6	638032719	Agitator arm	
7	638032718	Upper agitator plate	
8	638032761	Agitator shaft	
9	638032747	Actuator rod	

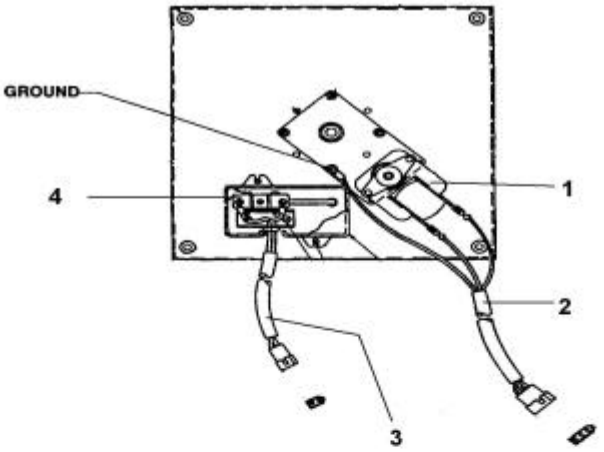

FIGURE 25. TOP VIEW ICE LEVEL CONTROL ASSEMBLY
PART NO. 32770 IMD 300-15 AND 32770-002 IMD 302-5

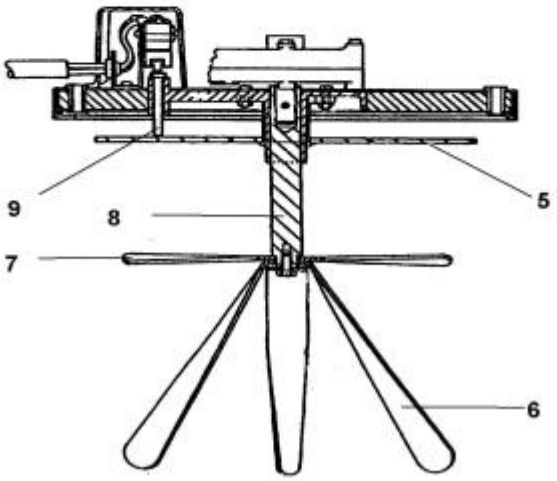

IMI Cornelius
Rawson Spring Way
Riverdale Ind Est
Sheffield
S6 1PG
Tel. +44 (0) 1142 855886 Fax. +44 (0) 1142 321070

IMD 302 15

SPARES LIST **WATER RESERVOIR**

item no	part no	description
1	638030824	water level control
2	638030821	float assembly
3	638008483-06	reed switch
4	638032515	water level bracket
5	638030825	Reservoir assembly

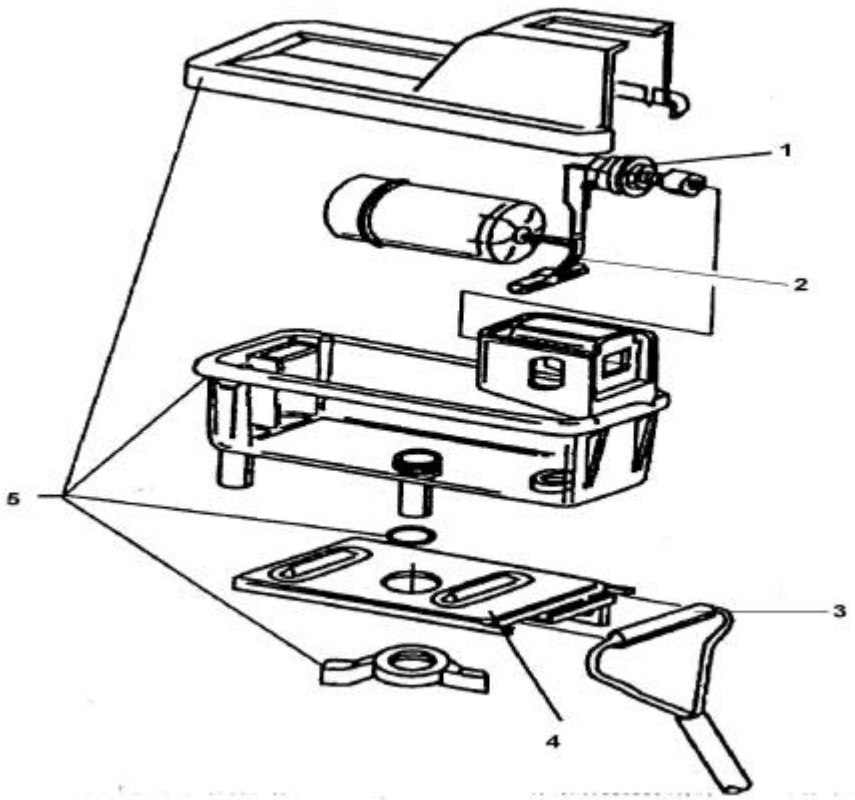

IMI Cornelius
Rawson Spring Way
Riverdale Ind Est
Sheffield
S6 1PG
Tel. +44 (0) 1142 855886 Fax. +44 (0) 1142 321070